LACAVA®

Kubista Vanity
Item #H266, H266NT

Features:
-Wall-mount wooden vanity
-Four drawers with routed finger pulls
-Soft-closing full-extension drawer slides with weight capacity of 100 lbs.
-Wooden mounting cleat
-Optional metal trims between each drawer
-Large drawers have lower back for plumbing
-Washbasin #H266T sold separately
-Customizable (please request a quote)
-Handmade in USA
-Manufactured with low VOC finishes and wood from renewable forests

Recommended Accesories:
-Item #H266T: Solid surface double-bowl washbasin with overflow
 -Recommended standard American grid drain with overflow (i.e. 7100-18OF)
 -Available in Gloss White (-001G) or Matte White (-001M)
 -Faucet hole options available: None, One, Two, or Three in 8" spread
-Item#H26LEG: Set of optional metal frame legs for Kubista vanities

Finish Options:
02 - Natural Cherry
06 - Wenge
07 - Natural Walnut
08 - Matte White (TEX1 - fine texture)
16 - Matte Black (TEX1 - fine texture)
18 - Ebony
20 - Ash Gray
22 - Gray Zebra
24 - Classic Walnut
31 - White Oak
33 - African Mahogany
34 - Matte Mocha (TEX1 - fine texture)
35 - Matte Ardesia (TEX1 - fine texture)
36 - Espresso
37 - Weathered Oak
52 - Silver Oak
85 - Gloss White
86 - Gloss Black
87 - Gloss Mocha
88 - Gloss Ardesia

Product Specifications:

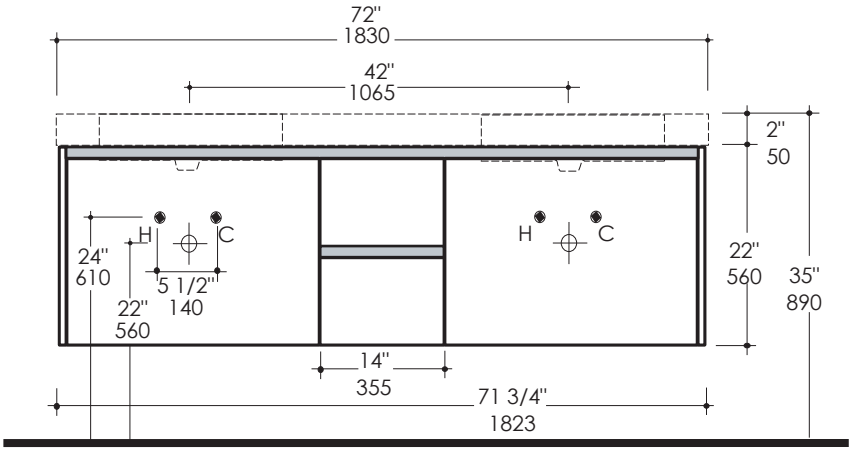

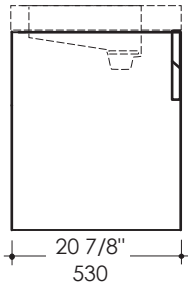

Notes:
Drawings provided herein are meant to give the user an idea of the product and are not made to scale. The size in inches is rounded up to the nearest 1/16". Slight variances can often occur with porcelain and woodwork. Therefore, LACAVA will not be held resposible for any cutouts, countertops, or furniture made without the actual product or template from LACAVA. Differences in color, grain, appearance and texture are inherent in all natural woodwork, and should be expected. Variances in these qualities are not deemed manufacturing defects,and will not be accepted as valid reasons to return or exchange any LACAVA woodwork. Plumbing specifications are only a guideline and may need to be altered based on the application.

LACAVA is committed to the highest level of customer service. Please feel free to contact us at 1-888-522-2823 (toll free) or by email at info@lacava.com for technical assistance or any general inquiries.

Rev. 10-27-2017